BLUE Split

Dart Aerospace Ltd.

23

Date: Wednesday, 5/16/2007 9:13:23 AM
User: Kim Johnston

Process Sheet

Customer	: CU-DAR001 Dart Helicopters Services	Drawing Name	: AFT CAP
Job Number	: 32375 – 3		
Estimate Number	: 10312		
P.O. Number	: N/A	Part Number	: D2646
This Issue	: 5/16/2007 S.O. No. : N/A	Drawing Number	: D2646 REV C
Prsht Rev.	: NC	Project Number	: N/A
First Issue	: N/A Type : PURCHASED PARTS	Drawing Revision	: C
Previous Run	: 31335	Material	: N/A
Written By	:	Due Date	: 6/5/2007 Qty: 16 Unit: Each
Checked & Approved By	: 07.05.16		
Comment	: Est: G 05.08.22 Hole size revised in Step 5 KJ/JLM Est Rev:H Changed Inserts 07-02-19 JLM		

Additional Product

Job Number:

Seq. #:	Machine Or Operation:	Description :
1.0	FG	PURCHASING

Comment: PURCHASING
Issue P/O: 3794 CL 07/05/16 (16)
1-Spin as per Dwg D2646
2-Material release note required

2.0	D2646P	Aft Cap

Comment: Qty.: 1.0000 Each(s)/Unit Total : 16.0000 Each(s)
AFT CAP

3.0	PACKAGING 1	PACKAGING RESOURCE #1

Comment: PACKAGING RESOURCE #1
Receive & Inspect for Transit Damage
Ensure Material Release Note is attached
07/06/05 (16)

4.0	QC6	DIMENSIONAL CHECK

07.06.06 (16)

Comment: DIMENSIONAL CHECK
Inspect dimensions as per Dwg D2646

5.0	SMALL FAB 1	SMALL & MEDIUM FAB RESOURCE 1

Comment: SMALL & MEDIUM FAB RESOURCE 1
1-Drill using DT8026 as per Dwg D2646.
2-Open holes to ~~.250"~~ .297 ~~and chink~~ as per Dwg D2646. CE 07.06.11
3-Deburr
07/06/12 (16)

Form: Process

Date: Wednesday, 5/16/2007 8:13:23 AM
User: Kim Johnston

Process Sheet

Customer: CU-DAR001 Dart Helicopters Services
Drawing Name: AFT CAP

Job Number: 32375
Part Number: D2646

Job Number:

Seq. #:	Machine Or Operation:	Description :
6.0	HAND FINISHING1	HAND FINISHING RESOURCE #1

Comment: HAND FINISHING RESOURCE #1
Acid etch and Alodine as per QSI 005 4.1 — 07-06-13

7.0	SPRAY PAINTING	SPRAY PAINTING

Comment: SPRAY PAINTING
-PRIME — Atelier Debosselage
-PAINT DELFLEET BLUE — P.O 4034 C20706125 (2)
-CLEAR DELFLEET

8.0	QC14	INSPECT SPRAY PAINT

Comment: INSPECT SPRAY PAINT — 06-22

9.0	ALS71032130	Insert

Comment: Qty.: 2.0000 Each(s)/Unit Total : 32.0000 Each(s)
INSERT
Batch: m 103495

10.0	SMALL FAB 1	SMALL & MEDIUM FAB RESOURCE 1

Comment: SMALL & MEDIUM FAB RESOURCE 1
Install inserts as per Dwg D2646 — FL 07/06/25 (2)

11.0	QC5	INSPECT WORK TO CURRENT STEP

Comment: INSPECT WORK TO CURRENT STEP — 06-25 (2)

12.0	PACKAGING 1	PACKAGING RESOURCE #1

Comment: PACKAGING RESOURCE #1
Identify and Stock
Location: FP9 — FL 07/06/25 (2)

Form: inprocess

Date: Wednesday, 5/16/2007 8:13:23 AM
User: Kim Johnston

Process Sheet

Customer: CU-DAR001 Dart Helicopters Services

Drawing Name: AFT CAP

Job Number: 32375

Part Number: D2646

Job Number:

Seq. #:	Machine Or Operation:	Description :
13.0	QC21	FINAL INSPECTION/W/O RELEASE

Comment: FINAL INSPECTION/W/O RELEASE

Job Completion

Form: mrpcss

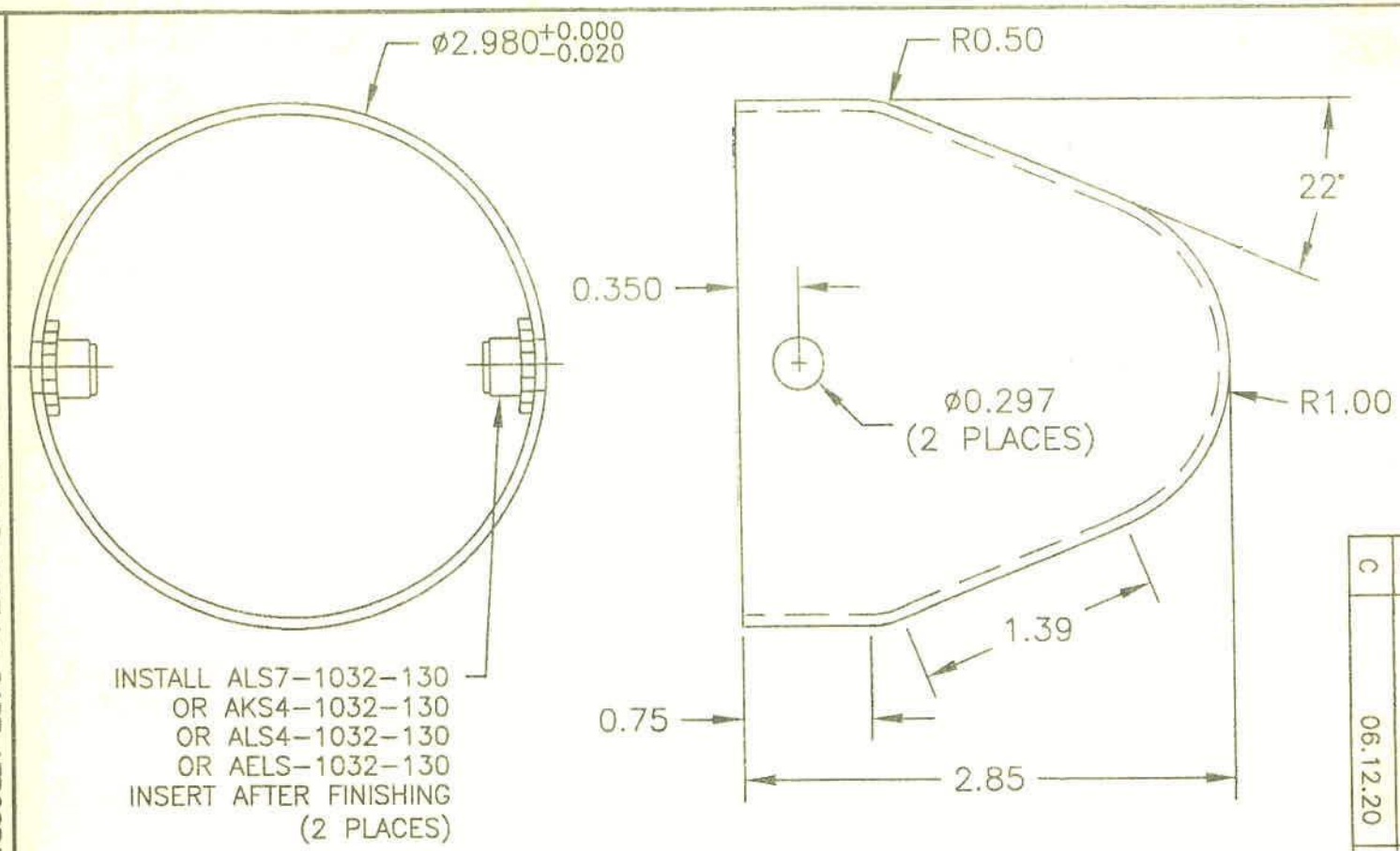

D2646 AFT CAP

1) MATERIAL: ALUMINUM 1100−0 0.063 THICK (QQ−A−250/1)
2) FINISH: CHEMICAL CONVERSION COAT PER DART QSI 005 4.1
   POWDER COAT ASSEMBLY WHITE (4.3.5.1) PER DART QSI 005 4.3
3) ALL DIMENSIONS ARE IN INCHES
4) TOLERANCES ARE PER DART QSI 018 UNLESS OTHERWISE NOTED

RELEASED 07.02.12

DESIGN DS	DRAWN BY	DART AEROSPACE USA, INC. PORT HADLOCK, WA	
CHECKED	APPROVED	DRAWING NO. D2646	REV. C
DATE 06.12.20		TITLE AFT CAP	SHEET 1 OF 1
			SCALE 1:1

A	97.03.25	NEW ISSUE
B	05.04.01	CHANGE TO CLOSED INSERTS
C	06.12.20	CHANGE TO OPEN ENDED INSERTS

CERTIFICATION OF TEST RESULTS

ALCOA
1480 Manheim Pike
Lancaster Pa 17601

SOLD TO
COPPER & BRASS SALES INC
22355 WEST ELEVEN MILE ROAD
SOUTHFIELD, MI 48034

SHIP TO
COPPER & BRASS SALES INC
6555 E. DAVIDSON
DETROIT, MI 48212

CERT NO 0000598687
DATE 10/26/2004
SKID NO 322296
SKID WGT 9,760
PAGE 1 OF 1

ORDER NO	LB4176	PO NO	C99792		
ITEM NO	1	PART NO	050393-8		
ALLOY	1100	TEMPER	O	FORM	COIL
GAUGE	.06300	WIDTH	48.0000	LENGTH	0.0000

MILL FINISH
NON ANODIZE QUALITY
OUT STANDARD MILL FINISH
IN STANDARD MILL FINISH
NOT EMBOSSED

LOT: 238066 COIL: B01 DROP: 440525

INGOT	SI	FE	CU	MN	MG	CR	NI	ZN	TI
4405252	0.11	0.42	0.08	0.02	0.002	0.001	0.004	0.003	0.02

HEAD ULTIMATE STRENGTH 12.2 KSI
TAIL ULTIMATE STRENGTH 12.6 KSI
HEAD YIELD STRENGTH (OFFSET = .2%) 4.9 KSI
TAIL YIELD STRENGTH (OFFSET = .2%) 5.6 KSI
HEAD ELONGATION (G.L. = 2 IN) 35.5 %
TAIL ELONGATION (G.L. = 2 IN) 33.5 %

CHEMICAL COMPOSITION ACCORDING TO ASTM E-1251-04
MECHANICAL PROPERTIES ACCORDING TO ASTM B-557-02a

MECHANICAL AND CHEMICAL PROPERTIES MEET THE REQUIREMENTS OF:
ASME SB209 1100 O, AMS 4001H 1100 O,
ASTM B209-04 1100 O, AMS-QQ-A-250/1 1100 O

CERTIFICATION OF TEST RESULTS SHALL NOT BE REPRODUCED EXCEPT IN FULL
** END OF CERTIFICATION **

Attn Henry P Sipe
c/o Bore & CTB

This document certifies the material above has been tested in accordance with applicable specifications described herein and has met these requirements. The material is subject to terms and conditions on the Alcoa sales order agreement.

Authorized By:
JEFF FREAITT, LAB SUPERVISOR

Sieg's Manufacturing Ltd.
Metal Spinning and Fabricating
6236 - 205 STREET, LANGLEY, B.C. V2Y 1N7
TELEPHONE: (604) 530-7455 • FAX: (604) 530-7490

INSPECTION REPORT

Date: June. 4/07
Customer: Dart Aerospace
Packing Slip: 31273

Part#:	Quantity	Material	Check holes	Debur edges	Insp. By:
B32375	16	1461100	N/A	✓	[illegible]
B32427	50	1461100	N/A	✓	[illegible]

Notes:

Material Certification Attached: Yes.